DW4

Gasket trolleys

Gasket trolley for gasket reels

- Stable steel construction
- Four reel mounts
- Indispensable for gasket insertion
- Adjustable for any reel diameter
- Tool tray
- Four castors, two of which have a fixing brake

elumatec AG
Pinacher Straße, 61
75417 Mühlacker
Germany

Tel +49 7041-14-184
sales@elumatec.com
www.elumatec.com

The right to make technical alterations is reserved.

Gasket trolley DW 4

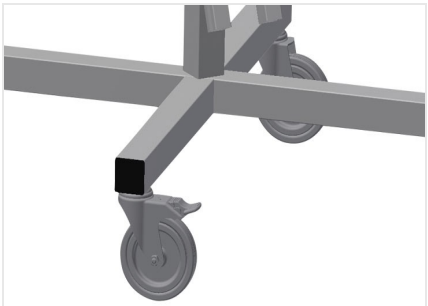

Casters

Four casters, two of which have a fixing brake, provide a high degree of mobility and easy, safe handling

Reel mounts

For four gasket reels. Mounts adjustable for any reel size.

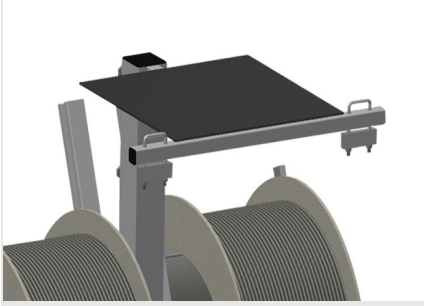

Storage area for tools

Practical tool tray located at working height

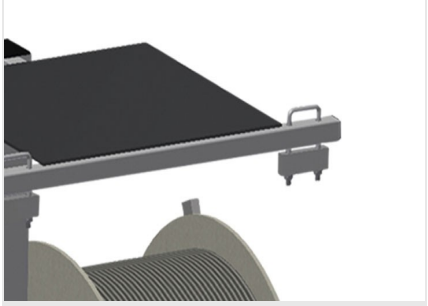

Unwinding brake

Unwinding brake for each reel

elumatec AG
Pinacher Straße, 61
75417 Mühlacker
Germany

Tel +49 7041-14-184
sales@elumatec.com
www.elumatec.com

The right to make technical alterations is reserved.

DW 4 / GASKET TROLLEYS

- Length 700 mm
- Width 700 mm
- Height 1,870 mm
- Four reel mounts
- Max. reel diameter 750 mm
- Max. reel width 250 mm
- Weight 40 kg
- Roller diameter 125 mm

elumatec AG
Pinacher Straße, 61
75417 Mühlacker
Germany

Tel +49 7041-14-184
sales@elumatec.com
www.elumatec.com

The right to make technical alterations is reserved.