elumatec

a voilàp company

VR

VERTICAL ROLLERS

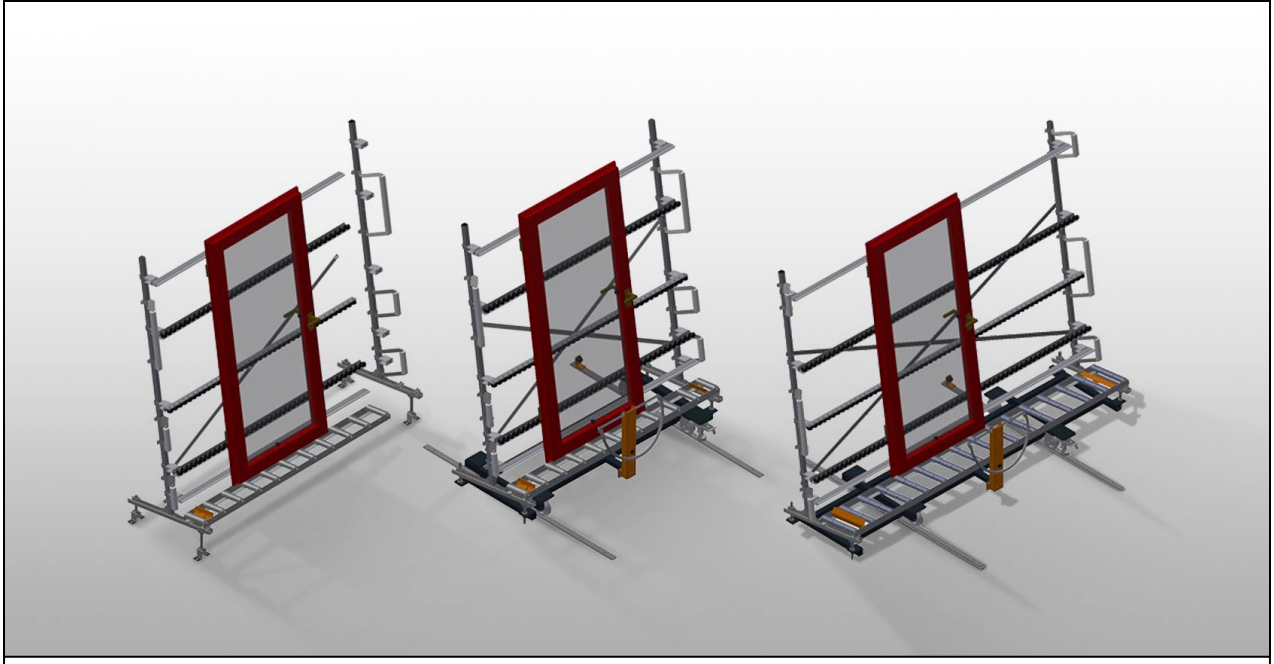

Expandable using modular system design. Vertical roller conveyor for smooth transportation and storage of window elements. Easy handling of window elements.
VR 2000 / VR 3000 / VR 4000 / VR 2003 / VR 3003 / VR 4003: Expandable using modular system design. Every roller conveyor unit is 2.000/3.000/4.000 mm long (according to model). Plastic slide bars top and bottom. Three mini-roller conveyors with rubber rollers, diameter 50 mm. Basic unit without end rack.
VR 2000 F / VR 3000 F / VR 4000 F / VR 2003 F / VR 3003 F / VR 4003 F: Every roller conveyor unit is 2.000/3.000/4.000 mm long (according to model). Plastic slide bars top and bottom. Three mini-roller conveyors with rubber rollers, diameter 50 mm. Basic unit without end rack.
VR 3000 DF / VR 4000 DF / VR 3003 DF / VR 4003 DF: Every roller conveyor unit is 3.000/4.000 mm long (according to model). Plastic slide bars top and bottom. Three mini-roller conveyors with rubber rollers, diameter 50 mm. Basic unit with end rack. Vertical roller conveyor on rails with flanged rollers, mobile. Roller conveyor can be rotated 360°.

elumatec AG
Pinacher Straße, 61
75417 Mühlacker
Germany

Tel +49 7041-14-184
sales@elumatec.com
www.elumatec.com

The right to make technical alterations is reserved.

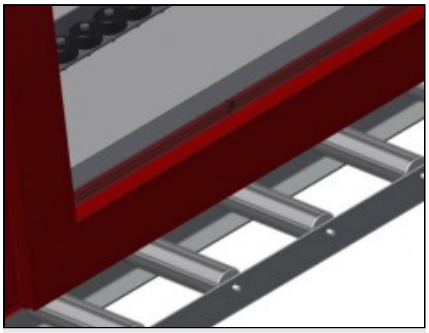

Support rollers VR 2000 / VR 3000 / VR 4000 / VR 2000F / VR 3000F / VR 4000F / VR 3000DF / VR 4000DF

Rollers throughout, support roller width 200 mm

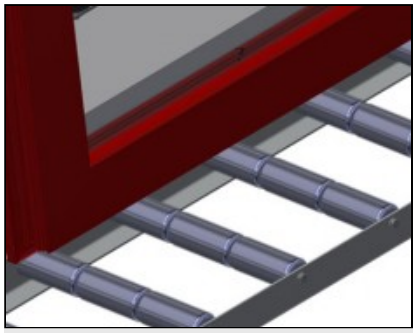

Support rollers VR 2003 / VR 3003 / VR 4003 / VR 2003F / VR 3003F / VR 4003F / VR 3003DF / VR 4003DF

Rollers throughout, Roller conveyor divided into three parts, 3x 120 mm

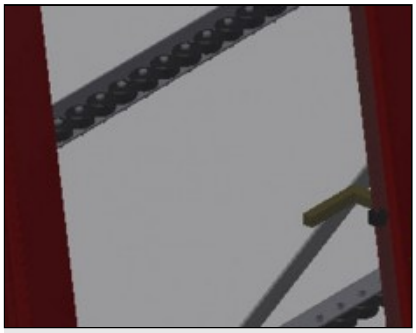

Mini-roller conveyor

Three mini-roller conveyors with rubber rollers, diameter 50 mm

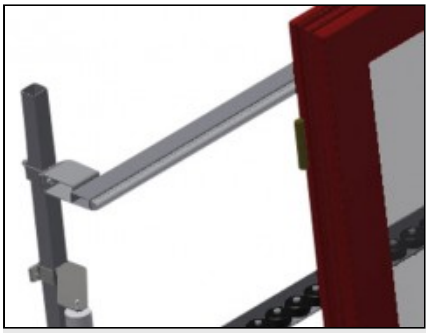

Back support

Rear back support with plastic slide bars, top and bottom

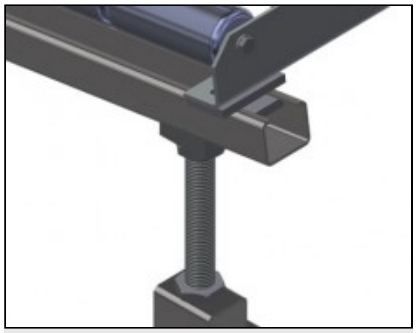

Roller conveyor height adjustment VR 2000 / VR 3000 / VR 4000 / VR 2003 / VR 3003 / VR 4003

Roller conveyor height adjustment

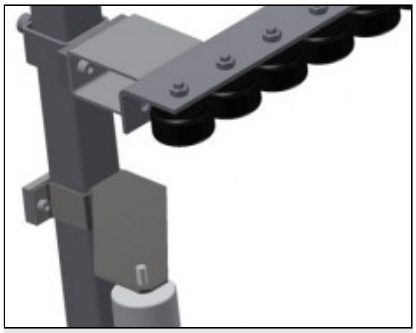

Mini-roller conveyor height adjustment VR 2000 / VR 3000 / VR 4000 / VR 2003 / VR 3003 / VR 4003

Mini-roller conveyor height is adjustable

elumatec AG
Pinacher Straße, 61
75417 Mühlacker
Germany

Tel +49 7041-14-184
sales@elumatec.com
www.elumatec.com

The right to make technical alterations is reserved.

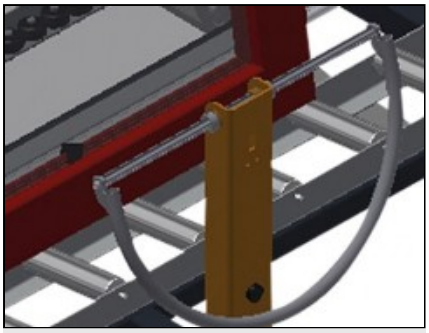

Grip VR 2000F / VR 3000F / VR 4000F / VR 3000DF / VR 4000DF

Grip makes pushing the roller conveyor on the rails easy

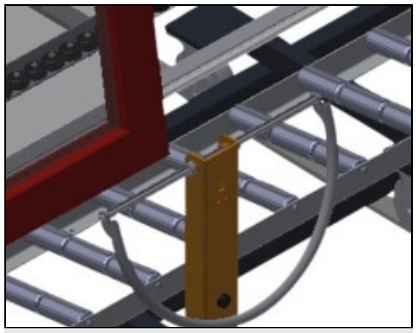

Grip VR 2003F / VR 3003F / VR 4003F / VR 3003DF / VR 4003DF

Grip makes pushing the roller conveyor on the rails easy



Mobility unit (VR 2000 / VR 3000 / VR 4000 / VR 2003 / VR 3003 / VR 4003 excluded)

Mobility unit with flanged rollers and fixing brake

elumatec AG
Pinacher Straße, 61
75417 Mühlacker
Germany

Tel +49 7041-14-184
sales@elumatec.com
www.elumatec.com

The right to make technical alterations is reserved.

VR / VERTICAL ROLLERS

MODELS

VR 2000

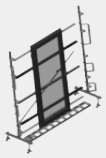

VR 3000

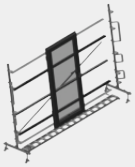

VR 4000

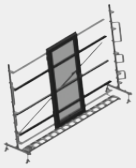

VR 2003

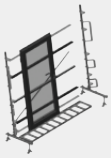

VR 3003

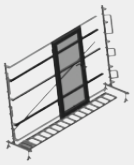

VR 4003

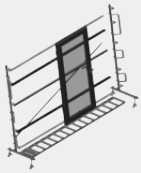

VR 2000 F



VR 3000 F



VR 4000 F



VR 2003 F



VR 3003 F



VR 4003 F

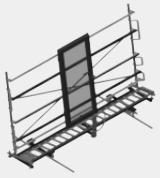

VR 3000 DF

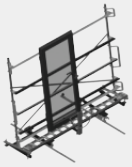

VR 4000 DF



VR 3003 DF



VR 4003 DF

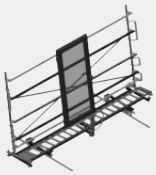

DIMENSION AND WEIGHT

VR 2000 / VR 3000 / VR 4000 / VR 2003 / VR 3003 / VR 4003 / VR 2000 F / VR 3000 F / VR 4000 F / VR 2003 F / VR 3003 F / VR 4003 F / VR 3000 DF / VR 4000 DF / VR 3003 DF / VR 4003 DF

Length (mm)	2.000 / 3.000 / 4.000 / 2.000 / 3.000 / 4.000 / 2.000 / 3.000 / 4.000 / 2.000 / 3.000 / 4.000 / 3.000 / 4.000 / 3.000 / 4.000
Width (mm)	900 / 900 / 900 / 900 / 900 / 900 / 1.000 / 1.000 / 1.000 / 1.000 / 1.000 / 1.000 / 1.000 / 1.000 / 1.000 / 1.000
Height (mm)	2.400 / 2.400 / 2.400 / 2.400 / 2.400 / 2.400 / 2.490 / 2.490 / 2.490 / 2.490 / 2.490 / 2.490 / 2.490 / 2.490 / 2.490 / 2.490
Support height (mm)	2.100

elumatec AG
Pinacher Straße, 61
75417 Mühlacker
Germany

Tel +49 7041-14-184
sales@elumatec.com
www.elumatec.com

The right to make technical alterations is reserved.

DIMENSION AND WEIGHT

Weight (kg)	80 / 120 / 200 / 100 / 120 / 220 / 100 / 140 / 200 / 120 / 180 / 200 / 180 / 220 / 200 / 240

VR 2000 / VR 3000 / VR 4000 / VR 2000 F / VR 3000 F / VR 4000 F / VR 3000 DF / VR 4000 DF

Support roller width (mm)	200

VR 2003 / VR 3003 / VR 4003 / VR 2003 F / VR 3003 F / VR 4003 F / VR 3003 DF / VR 4003 DF

Support roller divided into three parts (mm)	3 x 120

elumatec AG
Pinacher Straße, 61
75417 Mühlacker
Germany

Tel +49 7041-14-184
sales@elumatec.com
www.elumatec.com

The right to make technical alterations is reserved.

CHARACTERISTICS

Load capacity (kg)	200
Mini-roller conveyors with rubber rollers, diameter 50 mm	3
Basic unit with end rack	●
Lead-in rollers L= 500 mm (pair)	○
Lead-in rollers L= 250 mm (pair)	○
Additional mini-roller conveyors with rubber rollers top/bottom	○
VR 2000 F / VR 3000 F / VR 4000 F / VR 2003 F / VR 3003 F / VR 4003 F / VR 3000 DF / VR 4000 DF / VR 3003 DF / VR 4003 DF	
Vertical roller conveyor on rails with flanged rollers mobile	●
Rail 2,0 m left and right	○
VR 3000 DF / VR 4000 DF / VR 3003 DF / VR 4003 DF	
Roller conveyor can be rotated 360°	●
VR 2000 / VR 3000 / VR 4000 / VR 2003 / VR 3003 / VR 4003	
End rack	○
VR 2000 / VR 3000 / VR 4000 / VR 2000 F / VR 3000 F / VR 4000 F / VR 3000 DF / VR 4000 DF	
Profile protectors for L= 200 mm	○
End stop L= 200 mm	○
VR 2003 / VR 3003 / VR 4003 / VR 2003 F / VR 3003 F / VR 4003 F / VR 3003 DF / VR 4003 DF	
Profile protectors for L= 3x120 mm	○
End stop L= 3x120 mm	○

Included ● Available ○

elumatec AG
Pinacher Straße, 61
75417 Mühlacker
Germany

Tel +49 7041-14-184
sales@elumatec.com
www.elumatec.com

The right to make technical alterations is reserved.