elumatec

a voilàp company

HT

ASSEMBLY TABLES

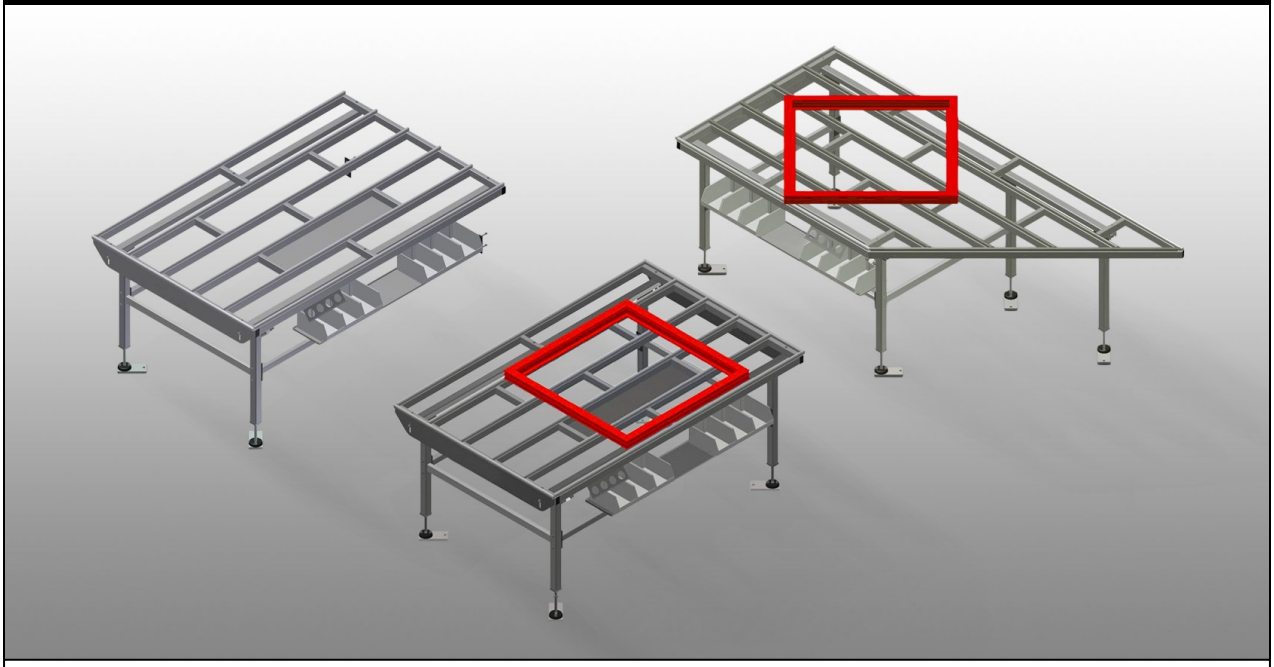

HT 1000 / HT 2000 / HT 3000: Horizontal table for all work tasks on frames and sashes. Stable steel construction. Table supporting surface with plastic slide bars. Storage tray for setting down tools and accessories. Adjustable height. Simple installation with a modular system design.
HT 1000E / HT 2000E / HT 3000E: Modular work table for a production line (basic module). Stable steel construction. Universal system of work tables for lines with a continuous production flow. Modular system: basic module + additional module. Add-on elements for individualised expansion. Additional modules are easy to install. Versatile work table for all applications: for example, as an individual table in the production flow, as an in-line workstation for assembly work, as a work table for gasket insertion, for the post-processing of special-order production items or as a buffer zone. Table supporting surface with plastic slide bars. Adjustable height. Simple installation with a modular system design.
HT 2045L / HT 2045R: Horizontal table for all work tasks on frames and sashes. Stable steel construction. Angled work table; can be used as a pass-through in the production line or as a buffer zone. Assembly table for all work tasks on frames and sashes. Table supporting surface with plastic slide bars. Storage tray for setting down tools and accessories. Adjustable height. Simple installation with a modular system design.

elumatec AG
Pinacher Straße, 61
75417 Mühlacker
Germany

Tel +49 7041-14-184
sales@elumatec.com
www.elumatec.com

The right to make technical alterations is reserved.

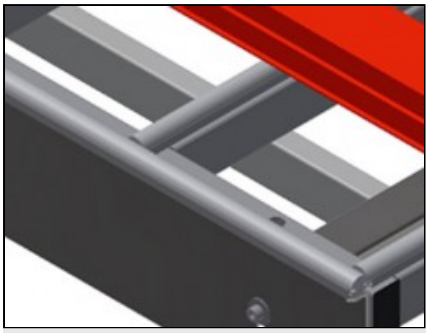

Supporting surfaces HT 1000 / HT 1000 E

Supporting surfaces with plastic slide bars

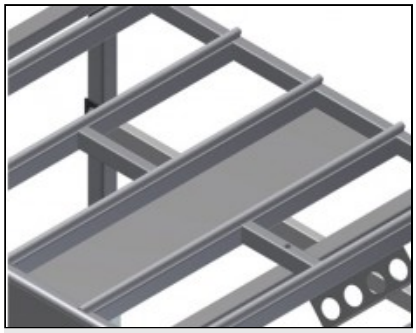

Storage tray HT 1000 / HT 1000 E

Storage tray for setting down tools and accessories

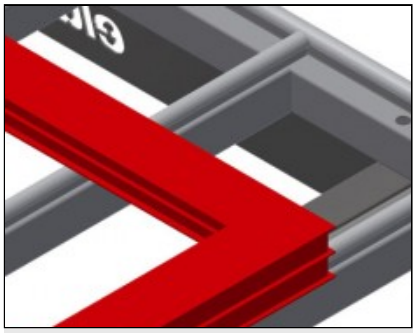

Supporting surfaces HT 2000 / HT 2000 E / HT 3000 / HT 3000 E / HT 2045 L / HT 2045 R

Supporting surfaces with plastic slide bars

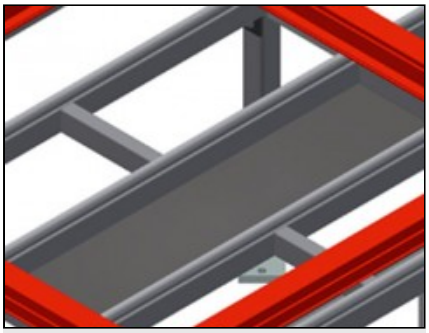

Storage tray HT 2000 / HT 2000 E / HT 3000 / HT 3000 E / HT 2045 L / HT 2045 R

Storage tray for setting down tools and accessories

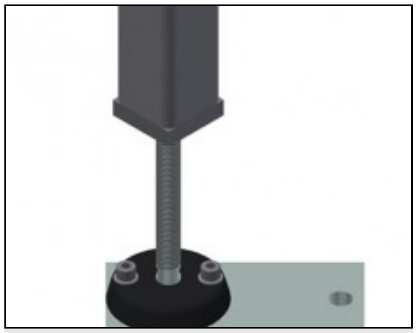

Height adjustment

Adjustable height, working height can be set to 850 – 1,000 mm by means of adjustable feet

elumatec AG
Pinacher Straße, 61
75417 Mühlacker
Germany

Tel +49 7041-14-184
sales@elumatec.com
www.elumatec.com

The right to make technical alterations is reserved.

HT / ASSEMBLY TABLES

MODELS

HT 1000



HT 2000



HT 3000

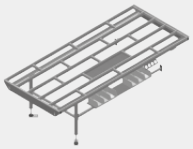

HT 1000 E



HT 2000 E



HT 3000 E



HT 2045 L



HT 2045 R



DIMENSION AND WEIGHT

HT 1000 / HT 2000 / HT 3000 / HT 1000 E / HT 2000 E / HT 3000 E / HT 20245 L / HT 2045 R

Length (mm)	1.000 / 2.000 / 3.000 / 1.000 / 2.000 / 3.000 / 2.850 / 2.850
Width (mm)	1.300
Height (mm)	850 ÷ 1.000
Weight (kg)	70 / 90 / 120 / 60 / 80 / 100 / 100 / 100

SUPPORTING SURFACE

HT 1000 / HT 2000 / HT 3000 / HT 1000 E / HT 2000 E / HT 3000 E / HT 20245 L / HT 2045 R

Adjustable height (mm)	●
Table supporting surface with plastic slide bars	○
Table brush strip supporting surface	○
Table felt profile strip supporting surface	○
Table rubber knob profile	○
Roller support	○

HT 1000 / HT 2000 / HT 3000 / HT 20245 L / HT 2045 R

Storage tray for setting down tools and accessories	●

elumatec AG
Pinacher Straße, 61
75417 Mühlacker
Germany

Tel +49 7041-14-184
sales@elumatec.com
www.elumatec.com

The right to make technical alterations is reserved.

SUPPORTING SURFACE

HT 1000 / HT 2000 / HT 3000 E

Lifting unit	○

HT 1000 E / HT 2000 E / HT 3000 E

Tool holder	○
Roller support for fold-up walk-through section	○
Fold-up walk-through section	○

HT 2045 R

Parallelogram support for 90°	○
Table brush strip supporting surface for parallelogram support	○
Table felt profile strip supporting surface for parallelogram support	○
Table rubber knob profile for parallelogram support	○
Roller support for parallelogram support 90°	○
Triangle support	○
Table brush strip supporting surface for triangle support	○
Table felt profile strip supporting surface for triangle support	○
Table rubber knob profile for triangle support	○
Roller support surface for triangle support	○

CHARACTERISTICS

HT 1000 / HT 2000 / HT 3000 / HT 20245 L / HT 2045 R

Tool holder	○

HT 1000 E / HT 2000 E / HT 3000 E

End strip with knob profile	○
End rack	○

HT 2000 / HT 3000 / HT 2000 E / HT 3000 E / HT 20245 L / HT 2045 R

Storage tray	○

HT 1000 / HT 2000 / HT 3000 / HT 1000 E / HT 2000 E / HT 3000 E / HT 20245 L / HT 2045 R

4-fold compressed air supply	○

Included ● Available ○

elumatec AG
Pinacher Straße, 61
75417 Mühlacker
Germany

Tel +49 7041-14-184
sales@elumatec.com
www.elumatec.com

The right to make technical alterations is reserved.